ITEM NO. : B5364-3DU-J

ASSEMBLY INSTRUCTIONS

1.Rotate the arms (A) to make all the arms extending outward in every direction.

2.Pass the wires through the connecting rod (C), screw the connecting rod into the threaded tube on the lamp body (B), and screw the canopy (D) into the rod.

3.Install the mounting plate (E) on the outlet box with the screws (F).

4.Loosen the hex nuts around the bolts (G) and screw in or unscrew the bolts from the junction box to get the right length for installation.

5.Connect the fixture wire to the circuit wire with the wire nuts (H)： black wire with live wire, white wire with neutral wire, ground wire with ground wire. Turn the wire nuts to twist the wires together. Wrap the wire nuts with insulated rubber tape.

6.Fix the canopy (D) to the mounting plate (E) with the ball nuts (J).

7.Insert the bulb (K) into the lamp holder.

8.Screw the lampshade (L) into the lamp holder gently.

Please consult a qualified Electrician if you are not familiar with electrical wiring.

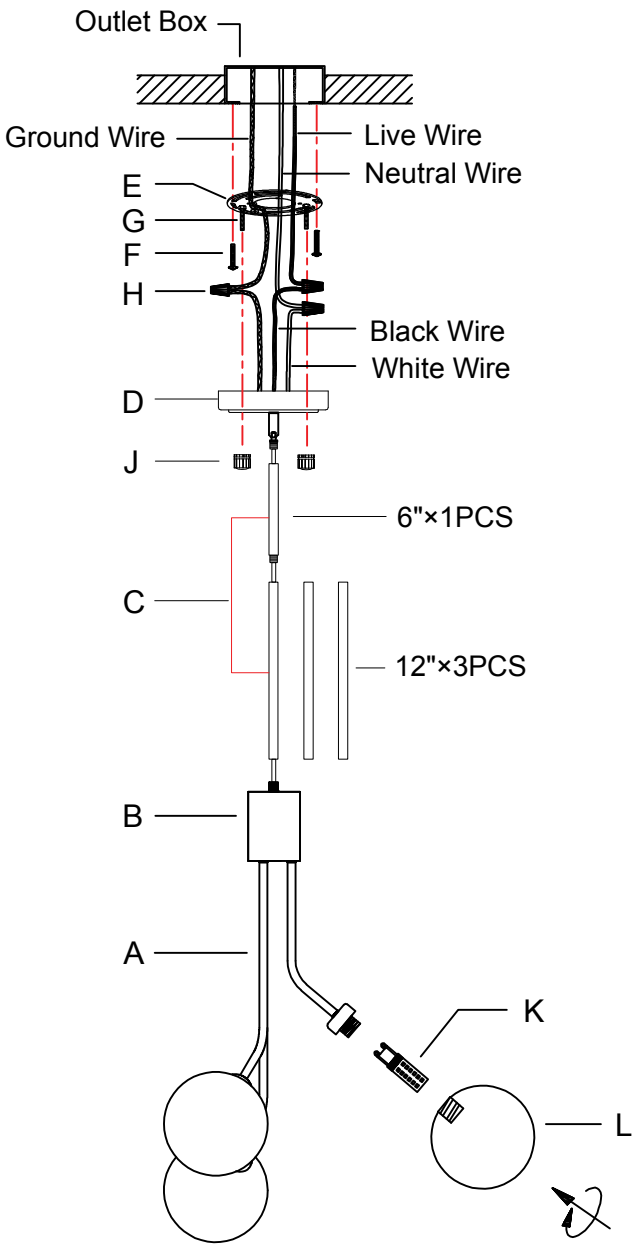

Recommended bulb shape

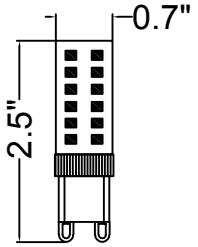

Max. Size of Bulb:
0.75" Wide * 3.1" High